ARTICULATING BOOM

HA 15 IP

- 140° (+70°/-70°) fly jib range of motion.
- 27 ft 10 in (8.5 m) outreach.
- 6 ft 6 in (2 m) stowed height.
- 4 ft 11 in (1.5 m) width.
- Full electric drive.
- 12 hrs operating autonomy.

ISO 9001
GROUP
PINGUELY
HAULOTTE

ARTICULATED BOOMS | VERTICAL MASTS | TELESCOPIC BOOMS | SCISSOR LIFTS | TRAILERS

Haulotte®
ON THE UP

HA 15 IP Articulating boom

The Haulotte® advantages

- Full electric drive
- Zero tailswing
- 6 ft 6 in (2 m) stowed height for easy travel through door ways
- 12 ft 1 in (3.7 m) short turning radius and 4 ft 11 in (1.50 m) width allows operation in the most congested areas
- Full proportional control station
- Work platform control
- Improved safety due to load limter in the basket
- Robust, reliable and easy to maintain

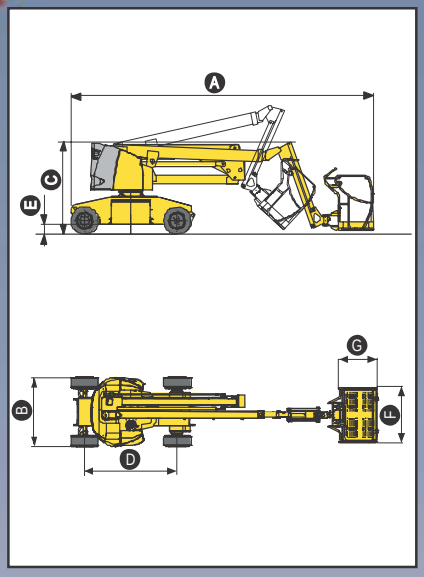

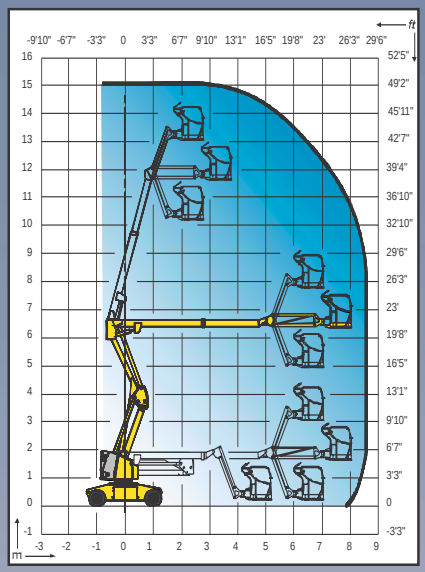

STANDARD FEATURES

- 360 Ah traction batteries
- Battery charge indicator
- 48 V – 50 A on-board battery charger
- Sensitive control box
- 3° tilt alarm
- Non marking tyres
- Outside / inside use: wind rated to 45 km/h (28 mph)
- Free wheeling device
- Hourmeter
- Turret slewing lock pin
- Towing hooks / lifting eyes
- Manual emergency lowering pump
- 2 front wheel drive and 2 reat steering wheels
- Load limiter in cage
- Horn

OPTIONS & ACCESSORIES

- Flashing light
- Socket (220V) in the basket
- Travel alarm
- Centralized battery filling kit
- Waterproof batteries
- Air line to cage
- Brakes remote release control box from lower control box
- Biodegradable oil
- Large basket option (1,5m x 0,8m / 4ft 11in x 2ft 7in)

CE

SPECIFICATIONS

Working height	49 ft 2 in	15.0 m
Platform height	42 ft 7 in	13.0 m
Maximum outreach	27 ft 10 in	8.50 m
Up and over clearance	21 ft 7 in	6.60 m
Capacity platform	507 lb	230 kg
Fly jib range of motion	140° (+70°/-70°)	140° (+70°/-70°)
A Length	21 ft 7 in	6.60 m
B Width	4 ft 11 in	1.50 m
C Stowed height	6 ft 6 in	2.0 m
D Wheelbase	6 ft 6 in	2.0 m
E Ground clearance	5 in	0.15 m
F x G Platform size	3 ft 11 in x 2 ft 7 in	1.2 x 0.8 m
Travel / transport length	18 ft	5.50 m
Travel / transport height	9 ft 10 in	3.00 m
Driving speed	0.43 mph / 3.1 mph	0.7 / 5 km/h
Outside turning radius	12 ft 1 in	3.70 m
Turret rotation	360°	
Hydraulic platform rotation	180°	
Energy	48 V - 360 Ah batteries	
Gradeability	25%	
Non marling tyres	23.10" x 12"	
Hydraulic tank	10.99 gallons	50 l
Total weight	15.653 lb	7.100 kg

DISTRIBUTED BY

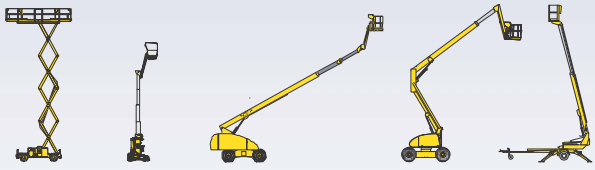

2420606310 - Ed. 06/2004 - Copyright © by Pinguely-Haulotte – products specifications are subject to change without notice – non contractual pictures.
HAULOTTE RCS LYON B 339 955 806

For further information on machine sales contact:
Mr. Mark Pugh Facelift GB Ltd. Web: www.facelift.co.uk
Westside, London Road, Hickstead, West Sussex, RH17 5LZ, England.
Tel: +44 (0) 1444 880913 Fax: +44 (0) 1444 881199 Email: mpugh@facelift.co.uk

facelift
access and safety made easy